AED Rollers Ltd

UNIT 7/2 HALAS IND. ESTATE, FORGE LANE, HALESOWEN
WEST MIDLANDS. B62 8EB. TEL: 0121 602 5070 FAX 0121 602 5080

DRG No. GT GRAVITY TRACK

COPYRIGHT RESERVED

AVAILABLE ROLLER DIAMETERS: Ø30, 40, 50, 57 & 60MM IN STEEL
AVAILABLE ROLLERS IN PLASTIC: Ø30, 40, 50 & 60

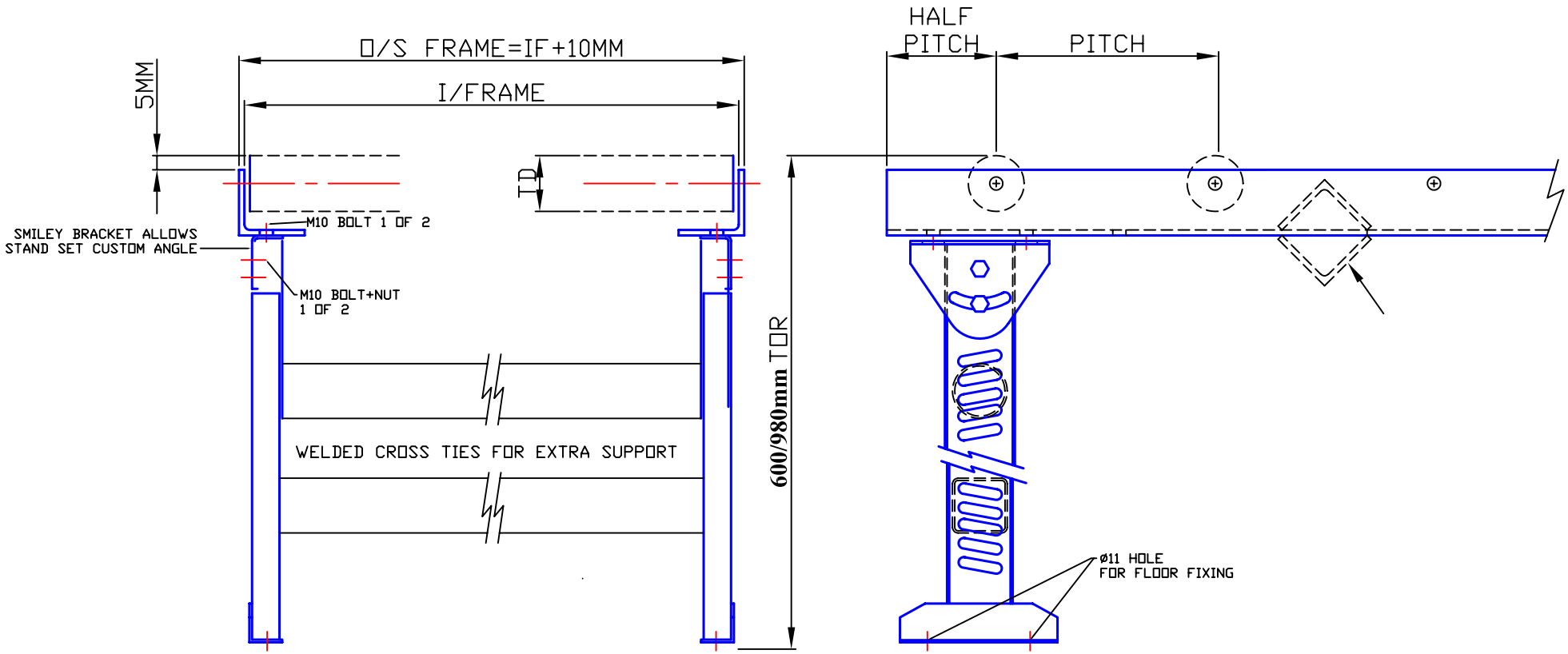

FINISH	GREY / BLACK
MATERIAL	MILD STEEL
HEAT TREATMENT	----
LUBRICATION	---

DRAWN: P. BEVAN	DATE: 6.1.04	TITLE: GRAVITY TRACK	DRG No. GT GRAVITY TRACK